Case Report | Journal of Orthopaedic Case Reports 2017 Nov-Dec : 7(6):Page 24-26

Open Reduction and Internal Fixation of Posterior Fracture Dislocation of the Shoulder Made Easy!

Waqar Saadat[1], Puneet Monga[2]

Learning Points for this Article:

Posterior dislocated humeral fracture can be reduced by schanz screw through deltopectoral approach without increasing risk to remaining blood supply.

Abstract

Introduction: Posteriorly dislocated humeral head fracture has a great implication, as it is associated with high risk of avascular necrosis, limited access through the deltopectoral approach, and posterior approach to the posteriorly dislocated humeral fracture increases the risk to the remaining blood supply.

Technical Tip: Posteriorly dislocated humeral fracture is approached through deltopectoral approach. Schanz pin is inserted into the humeral head to achieve purchase in the humeral head. Applying laterally directed force the humeral head is disengaged from the lateral margin of glenoid. A rotatory force then repositions the humeral head into a congruous position. Open reduction internal fixation is then carried out in a standard fashion.

Conclusion: Retrieving the humeral head from the posteriorly dislocated position in patients with posterior fracture dislocation of the shoulder can be challenge to a trauma surgeon. With this novel technique, humeral head is reduced through deltopectoral approach without increasing the risk to the remaining blood supply.

Keywords: Posterior shoulder dislocation, avascular necrosis, deltopectoral approach, Schanz screw.

Introduction

Proximal humeral fractures rank as second most common fractures of the upper extremity accounting for 4–5% of all fractures [1]. About 20% of displaced proximal humeral fractures require surgery [2]. However, functional outcome mainly depends on the age of the patient and less on the deformity [3, 4]. In fractures where adequate reduction and stable fixation cannot be achieved, and the vascularity of the head fragment is impaired or at risk, primary arthroplasty has to consider. Using anterograde, intramedullary nailing for complex fractures has considerable disadvantage of affecting rotator cuff function. For fractures where there is no significant displacement of the tuberosities, intramedullary locking nails are best option to consider in displaced two-part fractures or three- and four-part fractures [5]. Locking plate fixation has proved to be the gold standard, especially when the displacement of the tuberosities is present.

Retrieving locked posteriorly dislocated humeral head can be a challenge from an anterior deltopectoral approach [6]. Insertion of rotator cuff, biceps tendon and neighboring neurovascular structures, and extramedullary fixation of proximal humeral fractures mainly has to be approached from lateral aspect [7, 8]. Only way to achieve reduction of the medial fracture zone is through indirect manipulation or across the fracture line [9]. Fluoroscopy is mandatory as direct visual control is not possible [9]. Posteriorly dislocated humeral head

Access this article online

Website: www.jocr.co.in

DOI: 10.13107/jocr.2250-0685.934

Author's Photo Gallery

Dr. Waqar Saadat

Dr. Puneet Monga

[1]Department Trauma and Orthopaedic, Furness General Hospital, Barrow-in-Furness, England, UK,
[2]Department Trauma and Orthopaedic, Wrightington, Wigan and Leigh NHS Trust, England, UK.

Address of Correspondence:
Dr. Waqar Saadat,
Furness General Hospital, Barrow-in-Furness, England, UK.
E-mail: waqar.saadat@yahoo.co.uk

Journal of Orthopaedic Case Reports | pISSN 2250-0685 | eISSN 2321-3817 | Available on www.jocr.co.in | doi:10.13107/jocr.2250-0685.934

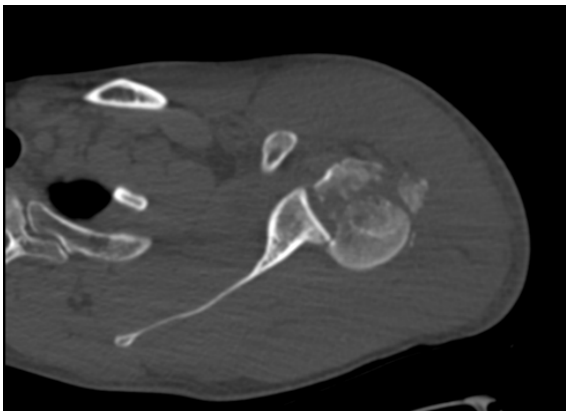

Figure 1: Computed tomography scan of the posteriorly dislocated proximal humerus fracture with fragment engaged on glenoid.

fracture and associated comminution has a great implication as it is associated with high risk of avascular necrosis [10]. The standard deltopectoral approach provides limited access to the posterior aspect of the proximal humerus [11] and posterior approach to the posteriorly dislocated humeral fracture increases the risk to the remaining blood supply. This poses a dilemma for the operating surgeon. We suggest a technical tip to help reduce the humeral head without increasing the risk to the remaining blood supply

Technical Tip

Posteriorly dislocated humeral fracture (Fig. 1 and 2) is approached through deltopectoral approach. Schanz screws are intended for use with external fixator system. With the help of universal drill chuck with a T-handle, Schanz screw is manually screwed into the middle of the fracture surface the posteriorly dislocated humeral head to achieve purchase in the humeral head (Fig. 3). Applying laterally directed force, the humeral head is disengaged from the lateral margin of the glenoid (Fig. 4). A rotatory force then repositions the humeral head into a congruous position. Open reduction internal fixation is then carried out in a standard fashion.

Discussion

Undisplaced proximal humerus fractures which can be treated

Figure 2: 3D computed tomography reconstruction.

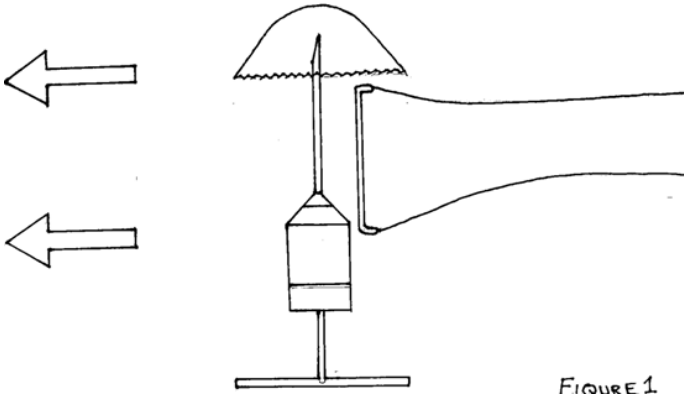

Figure 3: Diagram showing engaged posteriorly dislocated humeral fracture.

and managed non-operatively with favorable outcome, fractures with intra-articular extension and severe comminution require surgical fixation [2, 12]. Fracture reduction is of paramount importance in orthopedic surgery which holds true even for proximal humerus fracture [13].

Conclusion

During the deltopectoral approach, soft-tissue stripping damage the local blood supply and integrity of deltoid, which may increase the risk of avascular necrosis and delay post-operative functional recovery [14, 15, 16]. Retrieving the humeral head from the posteriorly dislocated position in patients with posterior fracture dislocation of the shoulder can be challenge to a trauma surgeon.

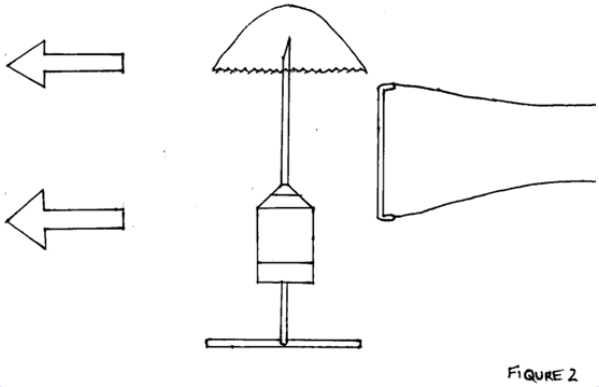

Figure 4: Diagram showing disengaged posteriorly dislocated humeral fracture.

Clinical Message

With this novel technique, the humeral head is reduced via deltopectoral approach without increasing the risk to the remaining blood supply.

References

1. Neer CS 2nd, Rockwood CA. Fractures and dislocations of the shoulder. In: Rockwood and Green: Fractures in Adults. Philadelphia, PA: Lippincott; 1984. p. 675-721.
2. Nho SJ, Brophy RH, Barker JU, Cornell CN, MacGillivray JD. Management of proximal humeral fractures based on current literature. J Bone Joint Surg Am 2007;89 Suppl 3:44-58.
3. Fjalestad T, Hole MØ. Displaced proximal humeral fractures: Operative versus non-operative treatment – A 2-year extension of a randomized controlled trial. Eur J Orthop Surg Traumatol 2014;24:1067-73.
4. Ring D. Current concepts in plate and screw fixation of osteoporotic proximal humerus fractures. Injury 2007;38 Suppl 3:S59-68.
5. Maier D, Jäger M, Strohm PC, Südkamp NP. Treatment of proximal humeral fractures - a review of current concepts enlightened by basic principles. Acta Chir Orthop Traumatol Cech 2012;79:307-16.
6. Cheng SL, Mackay MB, Richards RR. Treatment of locked posterior fracture-dislocations of the shoulder by total shoulder arthroplasty. J Shoulder Elbow Surg 1997;6:11-7.
7. Gerber C, Schneeberger AG, Vinh TS. The arterial vascularization of the humeral head. An anatomical study. J Bone Joint Surg Am 1990;72:1486-94.
8. Meyer C, Alt V, Hassanin H, Heiss C, Stahl JP, Giebel G, et al. The arteries of the humeral head and their relevance in fracture treatment. Surg Radiol Anat 2005;27:232-7.
9. Laux CJ, Grubhofer F, Werner CML, Simmen HP, Osterhoff G. Current concepts in locking plate fixation of proximal humerus fractures. J Orthop Surg Res 2017;12:137.
10. Widnall JC, Dheerendra SK, Malal JJ, Waseem M. Proximal humeral fractures: A review of current concepts. Open Orthop J 2013;7:361-5.
11. Robinson CM, Murray IR. The extended deltoid-splitting approach to the proximal humerus: Variations and extensions. J Bone Joint Surg Br 2011;93:387-92.
12. Friess DM, Attia A. Locking plate fixation for proximal humerus fractures: A comparison with other fixation techniques. Orthopedics 2008;31.
13. Doshi C, Sharma GM, Naik LG, Badgire KS, Qureshi F. Treatment of proximal humerus fractures using PHILOS plate. J Clin Diagn Res 2017;11:RC10-13.
14. Brunner F, Sommer C, Bahrs C, Heuwinkel R, Hafner C, Rillmann P, et al. Open reduction and internal fixation of proximal humerus fractures using a proximal humeral locked plate: A prospective multicenter analysis. J Orthop Trauma 2009;23:163-72.
15. Gallo RA, Zeiders GJ, Altman GT. Two-incision technique for treatment of complex proximal humerus fractures. J Orthop Trauma 2005;19:734-40.
16. Zlotolow DA, Catalano LW 3rd, Barron OA, Glickel SZ. Surgical exposures of the humerus. J Am Acad Orthop Surg 2006;14:754-65.

Conflict of Interest: Nil
Source of Support: None

How to Cite this Article

Saadat W, Monga P. Open Reduction and Internal Fixation of Posterior Fracture Dislocation of the Shoulder Made Easy. Journal of Orthopaedic Case Reports 2017 Nov-Dec; 7(6): 24-26